ECE 385

Spring 2025

Experiment #1

Introductory Experiment

Artha Amanda Sidauruk
3220300399
Friday, Feb 19, 2025. D-231
TA: Qiyang Wu

1. INTRODUCTORY

The main objective of this lab is to build a 2-to-1 Multiplexer using only NAND gates (7400 Quad 2-input NANDs are used). Additionally, the goal of the lab is to observe static-1 hazards (glitches) in the provided original circuit, which includes the glitches, and to eliminate glitches by redesigning the circuit. This is achieved by adding minterms to the Boolean function and circuit using K-map. Quartus Prime Lite is used to create the Block Diagram/Schematic and simulate it, while in the lab, an oscilloscope is used to detect and analyze the glitches.

2. DESCRIPTION OF THE CIRCUIT DIAGRAM

2.1 PRELAB PART A

The following is a 2-to-1 Multiplexer circuit with a single chip implementation using one 7400 Quad 2-input NANDs. 2-to-1 MUX is a digital switchbox that has two inputs (A, C), one output (Z), and select (B). By using Logic Table and Karnaugh Maps, we obtain the Boolean expression of 2-to-1 MUX which is Z = AB + B'C.

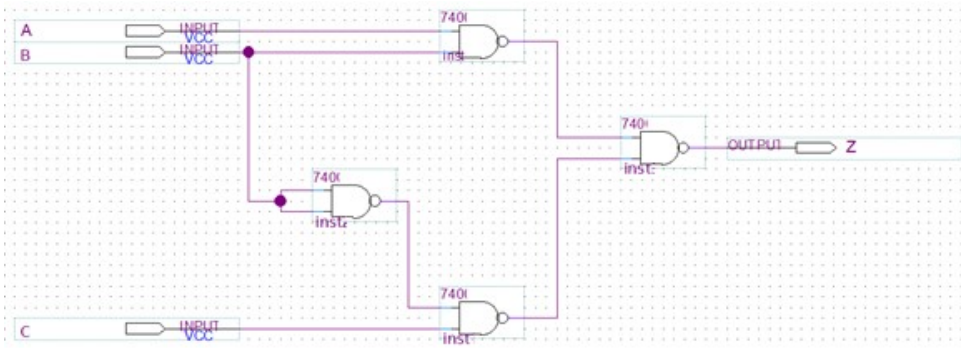

Figure 1: 2-to-1 Multiplexer

However, the design experiences glitches. When the input is changed, before the final steady state value is reached, sometimes the wrong output appears during the settling phase, this phenomenon is called a glitch. Glitches occur due to the propagation delay of the combinational logic gates. The wrong output may occur when one input reaches the input of the gate while the other input is delayed.

Below is an illustration of a static-1 hazard that occurs in the design circuit figure 1.

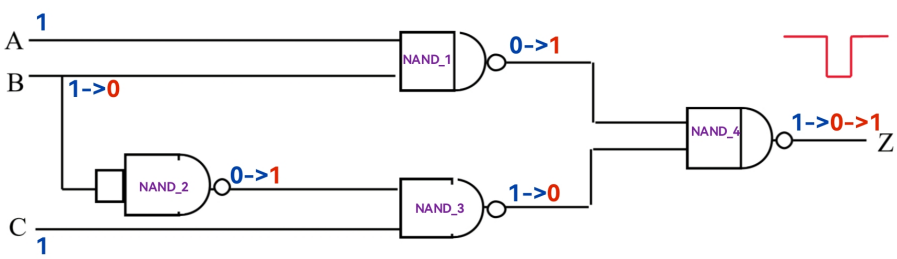

Figure 2: Example Static-1 Hazard in 2-to-1 MUX

In Figure 2, initially, all inputs (A, B, C) are 1 and output is 1. When B changes from 1 to 0 (falling edge), output $NAND_1$ immediately changes to 1. On the other hand, output $NAND_3$ remains 1 for a certain time because of the delay caused by the change of output $NAND_2$ from 0 to 1. So, a glitch occurs where the output Z which was initially 1 will change to 0 for a while and finally changes to 1. The static analysis of the logic tells us that the output should stay at logic 1, but produces a 0 glitch (pulse). Hence, this event is called a static-1 hazard.

2.2 PRELAB PART B

The next part of the prelab is eliminating the glitch, specifically, all static-1 hazards at the output of figure 1. In formal terms, A Static-1 Hazard is a pair of input combinations that: (1) Differ in only one input variable and (2) Both give a 1 output; such that it is possible for momentary 0 output to occur during transition in the differing input variable.

To eliminate the static-1 hazard in the circuit from Prelab Part A (see Figure 1), the redundant term, AC, is added to the Boolean expression. The final Boolean expression is Z = AB + B'C + AC. The corresponding circuit is shown below.

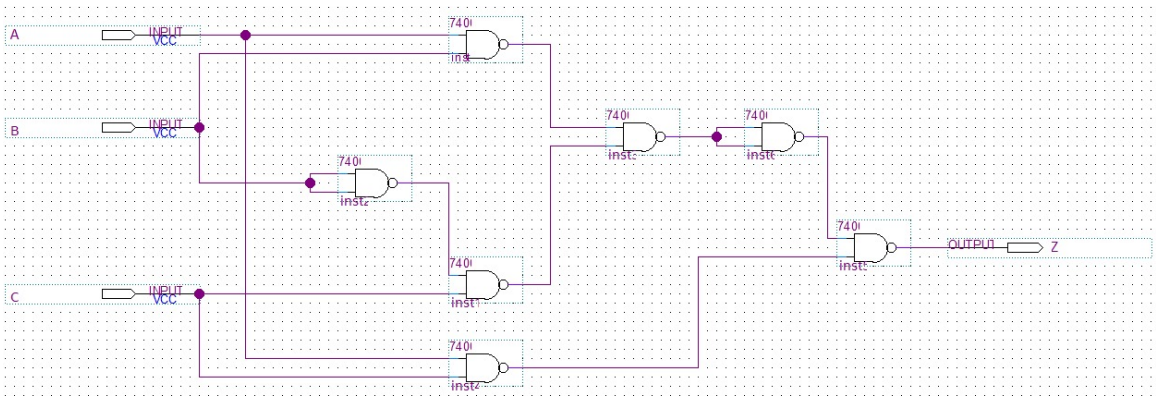

Figure 3: 2-to-1 MUX without Static-1 Hazard

3. DOCUMENTATION

3.1 TRUTH TABLE

The truth table of the circuit in the prelab part A and part B are the same. This table shows all the possible output of the logical expression.

A	B	C	Z
0	0	0	0
0	0	1	1
0	1	0	0
0	1	1	0
1	0	0	0
1	0	1	1
1	1	0	1
1	1	1	1

Figure 4: Truth table of Circuit Diagram in The Part A and Part B Prelab

3.2 KARNOUGH MAP OF THE CIRCUIT IN THE PRELAB PART A

Below is the Karnaugh map of the circuit in the prelab part A (see Figure 1). The minterm of this K-map are AB and B'C, so the Boolean expression in SOP form is Z = AB + B'C.

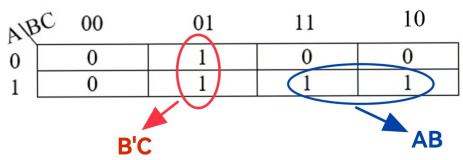

Figure 5: The K-map of Prelab Part A

3.3 KARNOUGH MAP OF CIRCUIT IN THE PRELAB PART B

Below is the Karnaugh map of the circuit in the prelab part B (see Figure 3), with the Boolean expression Z = AB + B'C + AC. The circuit built based on this Boolean function is glitch-free (see Figure 3).

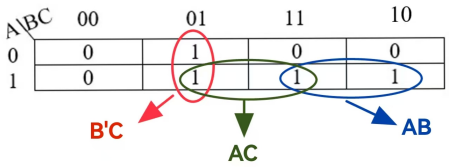

Figure 6: The K-map of Prelab Part B

3.4 LAB

- 2-1-MUX NAÏVE

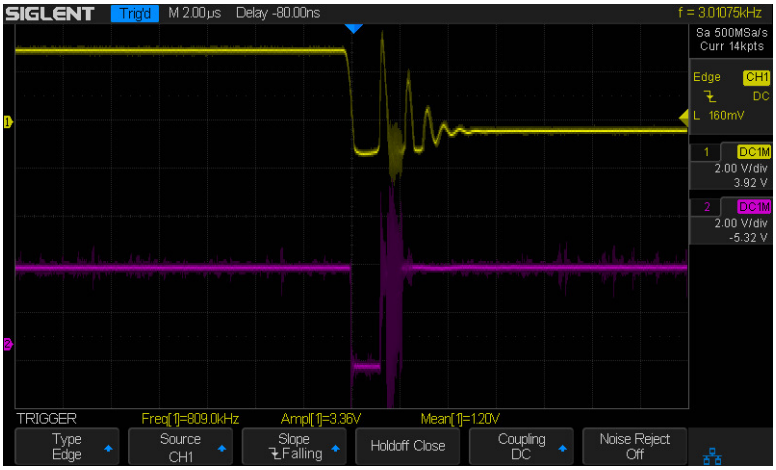

Figure 7: Oscilloscope Trace with Glitch

- 2-1-MUX REDUNDANT TERM (AC)

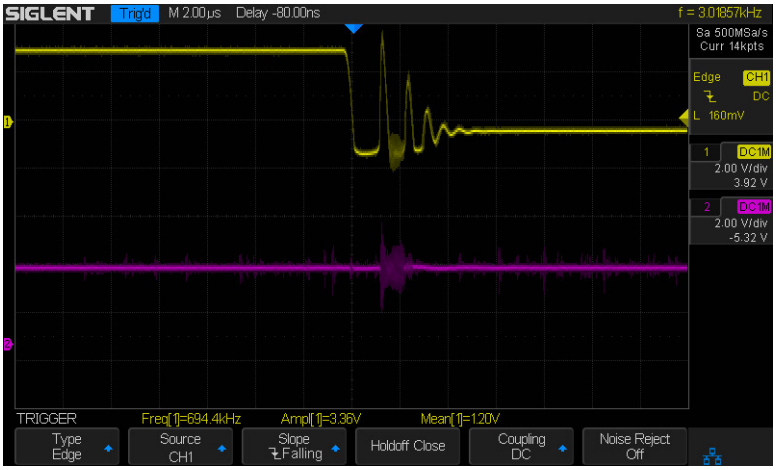

Figure 8: Oscilloscope Trace without Glitch

- REAL CIRCUIT IMPLEMENTATION

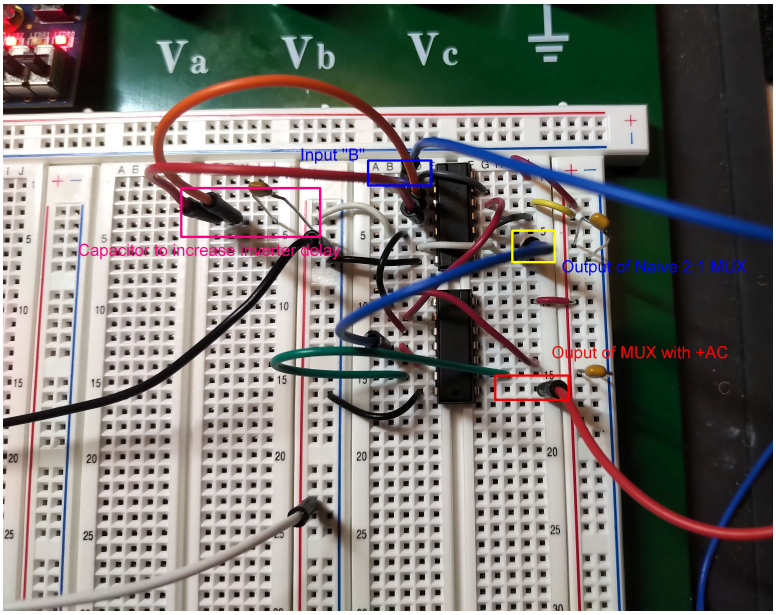

Figure 9: Real Circuit Implementation

4. ANSWERS TO LAB QUESTIONS

- **Complete a truth table of the output.**
  See Figure 4 Truth table of the Circuit Diagram in Part A and Part B Prelab.

- **Does it ("it" refers to the output) respond like the circuit of part A?**
  No, it does not respond like the circuit of part A. The output in part A has glitches. But, on the other hand, all the glitches in output part B are eliminated.

- **Describe and save the output and explain any differences between it (i.e. circuit in part B) to the results obtained in part 2 (i.e. circuit in part A)!**
  The output on the oscilloscope of circuit in part A (see Figure 7) has a small pulse, referred to as a glitch, when input B changes from 1 to 0 while A and C are high. However, there is no glitch in the output of circuit part B (see Figure 8), due to the addition of redundant term (AC) to the circuit. This change successfully eliminates the propagation delay, although a tiny noise can still be observed in the output. Since inputs A and C are set to high, as expected, the output remains 1 at all times, regardless of the value of input B. The AC signal acts as a buffer and provides a signal during the delay, thus avoiding the Static-1 Hazard.

- **For the circuit of part A of the prelab, at which edge (rising/falling) of the input B are we more likely to observe a glitch at the output?**
  We more likely to observe a glitch at the output at the falling edge of the input B. Both inputs A and C are assumed to be 1. When input B changes from 1 to 0 (failing edge), the propagation delay causes one part of the circuit to be slower than the other parts. This creates a momentary 0 at the output before it reaches steady state, which is 1. This is called a Static-1 Hazard. On the other hand, during the rising edge of B (B changes from 0 to 1), the output may momentarily produce a "1". But this corresponds to the steady state value of output Z, which is 1. So, the glitch is not produced.

5. ANSWERS TO POST-LAB QUESTIONS

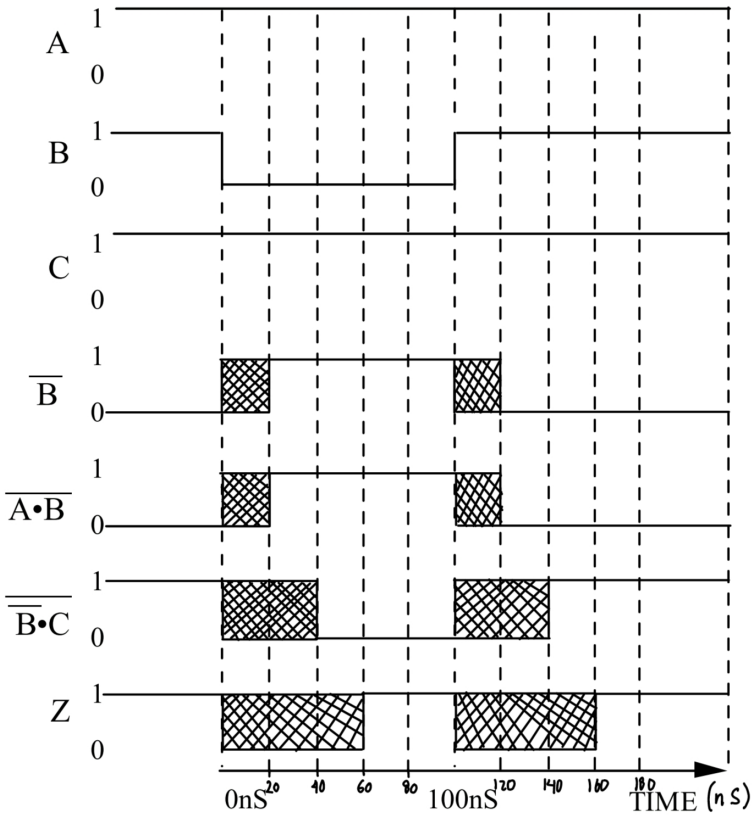

Figure 10: Timing Diagram

- **How long does it take the output Z to stabilize on the falling edge of B (in ns)**?
  The output Z takes 60 ns to stabilize on the falling edge of B.
- **How long does it take on the rising edge (in ns)**?
  The output Z takes 60 ns to stabilize on the falling edge of B.
- **Are there any potential glitches in the output, Z? If so, explain what makes these glitches occur.**
  Yes, there are. The glitches occur in the cross-hashed areas in the timing diagram. In that region, the signal value is unknown, because there is a propagation delay of the gates.

6. ANSWERS TO QUESTION FROM GENERAL GUIDE (GG.6, GG.29)

- **What is the advantage of a larger noise immunity (GG.6)?**
  The larger noise immunity allows the system to maintain the signal quality while tolerating higher levels of electrical noise. It still functions properly and preserves its correct logic state. The larger noise immunity reduces the likelihood of the gate to change its output due to noise (unwanted signals) at the input.
- **Why is the last inverter observed rather than simply the first?**
  The last inverter is observed rather than simply the first because it represents the signal that has passed through all the inverter stages of the several inverter gates in series. Noise introduced in earlier stages may be modified or reduced in subsequent inverters, as the signal propagates. When the signal has reached the last inverter, the cumulative impact of noise throughout the series can be observed, ensuring that the noise has minimal effect on the output. Thus, a more accurate

measure of the noise immunity of the system can be obtained. Additionally, in series inverters, noise immunity is determined by the smallest noise immunity in a single inverter.

- **Given a graph of output voltage (V_{OUT}) vs. input voltage (V_{IN}) for an inverter, how would you calculate the noise immunity for the inverter? See the following figure.**

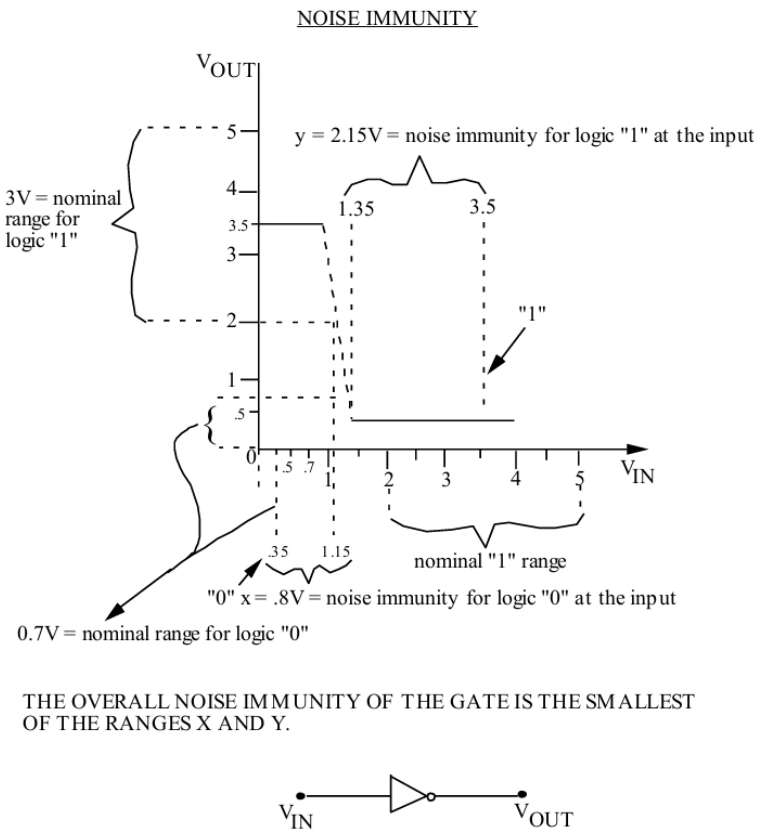

Figure 11: Noise Immunity

To calculate the noise immunity for the inverter, let identify the voltage ranges (i.e. the range when the output is stable): - Voltage range for logic 1: range where Vin results in a stable Vout near to zero. - Voltage range for logic 0: range where Vin results in a stable Vout near to the supply voltage, which is 5 V. The value 3.5 V is the highest voltage for logic 1 and the value 1.35 V is the highest voltage at which the output remains "1". Thus, the noise immunity for logic "1" at the input = 3.5 V – 1.35 V = 2.15 V. In the other hand, the value 0.35 V is the lowest voltage for logic 0 and the value 1.15 V is the highest voltage at which the output remains 0. Thus, the noise immunity for logic "0" at the input = 0.35 V – 1.15 V = 0.8 V. The noise immunity for the inverter is the smallest value between, the noise immunity for logic "1" at the input and the noise immunity for logic "0" at the input. Hence, the noise immunity for the inverter is 0.8 V. But, in the real inverter, the noise immunity for logic "0" is 1.15 V – 0.7 V = 0.45 V. The 1.15 V is the value of voltage that the logic "0" can tolerate and the 0.7 V is the maximum normal input of the logic "0". Similarly, the noise immunity for logic "1" is 2 V – 1.35 V = 0.65 V. Hence, the noise immunity of the gate is the minimum value, which is 0.45 V.

- **If we have two or more LEDs to monitor several signals, why is it bad practice to share resistors? (CG. 29)**
  Each LED has its own characteristic that may differ from other LEDs. For example, to work properly, an LED requires a specific amount of current. By sharing resistors, there is no guarantee for each LED to receive the suitable current. Moreover, if the magnitude of the forward voltage drops through the LEDs are not the same, some LEDs may become dim or even fail.

7. CONCLUSION

This lab highlights about designing a 2-to-1 multiplexer using only NAND gates and analyzing the static-1 hazards (glitches) that occur. The glitches occur due to the propagation delay in the gates. To eliminate the glitches, the 2-to-1 multiplexer is redesigned by adding a redundant term (AC) to the Boolean expression. This method is verified through direct implementation in the lab and analysis on an oscilloscope. Based on the oscilloscope results, the redesigned circuit successfully eliminates the glitches in the 2-to-1 Multiplexer.